Waveguide	Two wire Transmission line
A waveguide is a hollow metallic pipe design to carry microwave energy from one place to another	Transmission on line is a conductor or wire designed to carry electrical energy below microwave range from one place to another
Used for Microwave frequency above 1GHz	Used for RF up to 500 in GHz. Upto 18 GHz For short distance.
It acts as a High Pass Filter	All frequencies can pass through
TE and TM modes exist in WG.	TEM mode exists in TL.
Wave impedance (characteristic impedance) is a function of frequency.	Characteristic impedance in TL depends on the physical parameters of TL.
The large surface area of waveguide reduces copper losses	Two wire transmission line have large copper losses due to small surface area
Dielectric losses are less in waveguide	Dielectric losses are more in Two wire Transmission line
It is one conductor transmission system. The whole body of the waveguide acts as ground. The wave propagates through multiple reflections from the walls of waveguide (WG).	It consists of two conductors. One or both conductors are used to carry the wave.

Transmission Lines	Waveguides
Can support TEM mode of propagation	Can support many TE and TM modes of propagation
At microwave frequencies (3-300GHz), transmission lines become inefficient because of skin effect and dielectric losses	Waveguides are used at microwave frequency range to obtain larger bandwidth and lower signal attenuation
All frequencies can pass through the transmission lines	Waveguides can operate above a certain cut off frequency and therefore said to be act as high pass filter.
It acts as All Pass Filter	It acts as a High Pass
A transmission line may operate from DC, (f=0) to a very high frequency	Wave guides can not transmit DC and they become excessively large at frequencies below the certain microwave cut off frequencies
Propagation of wave is based upon the electric circuit theory as parameters are voltage and current	Propagation of wave is based upon the field theory as parameters are electric and magnetic fields
Low power transmission capacity	High power transmission capacity
It is complex to manufacture	It is simple to manufacture
Characteristic impedance in TL depends on the physical parameters of TL	Wave impedance (characteristic impedance) is a function of frequency.
It consists of two conductors. One or both conductors are used to carry the wave.	It is one conductor transmission system. Whole body of a waveguide acts as a ground. Wave propagates through multiple reflections called Total Internal Reflections.
Dielectric losses are more in Two wire Transmission line	Dielectric losses are less in waveguide

TRANSMISSION LINE AS CASCADED T SECTIONS

To study the behaviour of transmission line, a transmission can be considered to be made up of a number of identical symmetrical T sections connected in series as in Fig.1.2. If the last section is terminated with its characteristic impedance, the input impedance at the first section is Z_0. Each section is terminated by the input impedance of the following section.

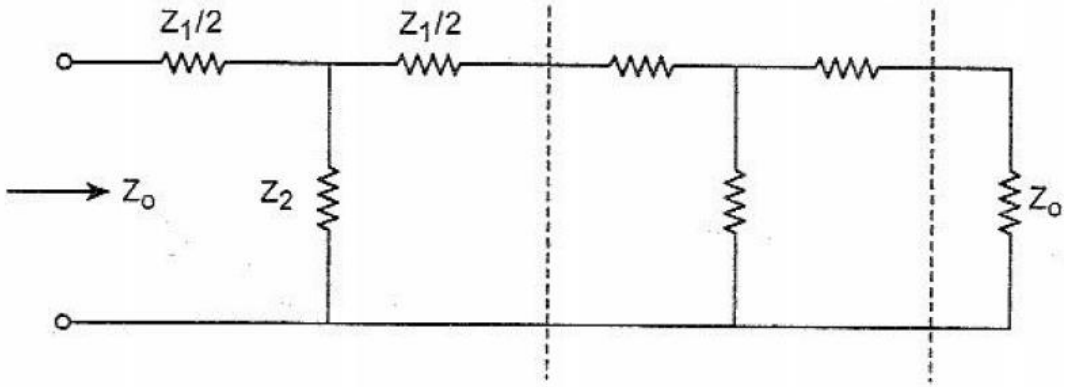

A line of cascaded T sections

Equivalent circuit diagram of transmission line

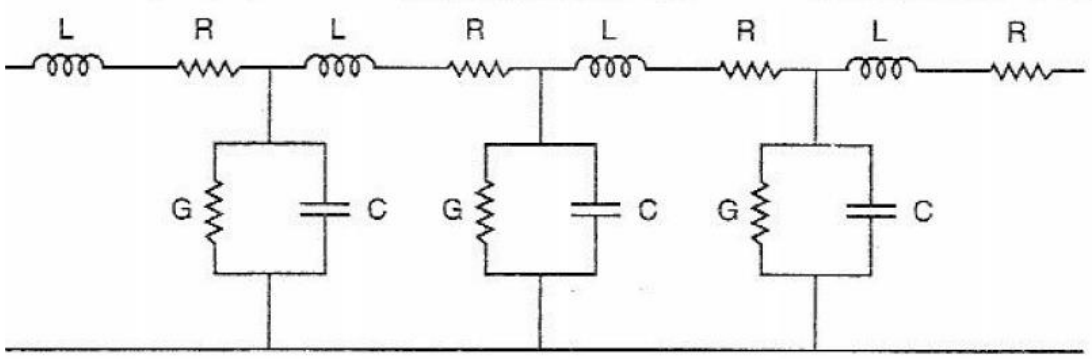

Since each conductor of transmission line has a certain length and diameter, it must have resistance and inductance; moreover the two conductors are separated by a dielectric medium (say, air), therefore there must be a capacitance between them. This dielectric between the conducting wires may not be perfect, and hence a leakage current will flow creating leakage (shunt) capacitance between the conductors. These four parameters resistance (R), inductance (L), capacitance (C) and conductance (G), all distributed along the lines are known as distributed parameters.

The four line parameters resistance (R), inductance (L), capacitance (C) and conductance (G) are also known as ***primary constants*** of the transmission line.

Resistance (R) is defined as the loop resistance per unit length of the transmission line. It is measured in ohms/km.

Inductance (L) is defined as the loop inductance per unit length of the transmission line. It is measured in Henries/km.

Capacitance (C) is defined as the shunt capacitance per unit length between the two transmission lines. It is measured in Farads/km.

Conductance (G) is defined as the shunt conductance per unit length between the two transmission lines. It is measured in mhos/km.

TRANSMISSION LINE EQUATION

Transmission line is a conductive method of guiding electrical energy from one place to another. A uniform transmission line can be considered to be made up of an infinite number of T sections, each of infinitesimal size *dx*. The equivalent circuit of T section of transmission line is shown in Fig. 1.4.

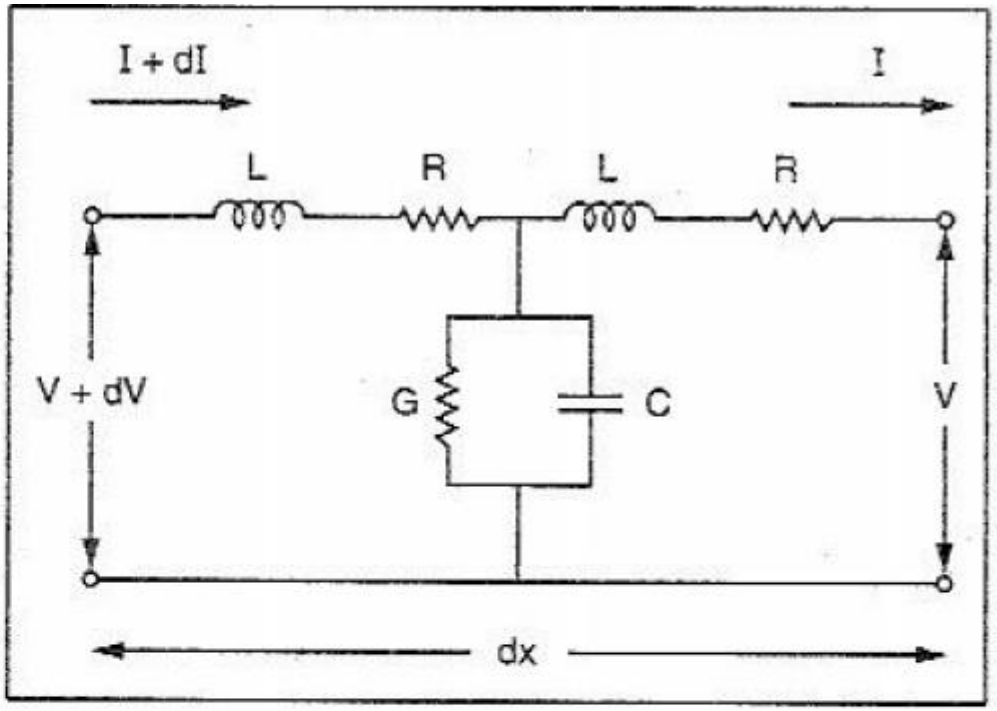

Fig. 1.4. Equivalent circuit of T section of Transmission line

The parameters R, L, G and C are distributed throughout the transmission line. The constants of an incremental length *dx* of a line are shown in Fig. 1.4. The series impedance per unit length and shunt admittance per unit length are given by

$$Z = R + j\omega L$$

$$Y = G + j\omega C$$

The elemental section is of length 'ds' and carries a current I. The series line impedance being Z ohms per unit, the series impedance of the element is Zds ohms, and shunt admittance of the elemental line Yds mhos.

The voltage drop in the length ds is (V = IR; E=IZ)

$$dV = IZ\,dx$$

$$\frac{dV}{dx} = IZ \text{ ---------- } -(1)$$

$$The\ current\ that\ flows\ across\ the\ line$$

$$dI = VYdx$$

$$\frac{dI}{dx} = VY \text{ ---------- } -(2)$$

$$Differentitiatin\ the\ equation\ (1)\ and\ (2) w.r.t\ 'x$$

$$\frac{d^2V}{dx^2} = Z\frac{dI}{ds} \quad ; \quad \frac{d^2V}{dx^2} = ZVY \text{ --- } -(3)$$

$$\frac{d^2I}{dx^2} = Y\frac{dV}{dx} \quad ; \quad \frac{d^2I}{dx^2} = YIZ \text{ --- } -(4)$$

Equation $(3) and\ (4)\ are\ the\ differential\ of\ the\ transmission\ line$

$$\frac{d^2V}{dx^2} - ZVY = 0, Let\ \frac{d^2}{dx^2} = \mathrm{m2}$$

$$\therefore m^2E - ZVY = 0;\ (m^2 - ZY)V = 0$$

$$m^2 = ZY; \quad m = \pm\sqrt{ZY}$$

$$The\ solution\ to\ (3)\ and\ (4) are given\ as$$

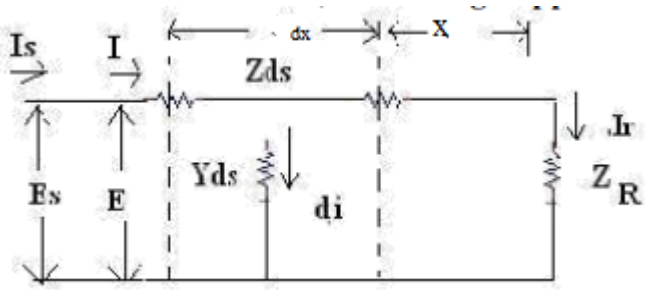

Where x is the point of observation from the receiving end

Step 2 : Apply Boundary Condition

Since the distance x is measured from the receiving end of the transmission line,

$$x = 0, \quad \therefore \quad I = I_R$$

$$V = V_R$$

Substituting this condition in equations (1.5), (1.6),

$$V_R = A + B$$

$$I_R = C + D$$

Since only one set of boundary condition is available differentiate (1.5)and (1.6) w.r.t distance 'x'

Differentiating the equation (1.5), w.r.t. 'x'

$$V = A\,e^{\gamma x} + B\,e^{-\gamma x}$$

$$\frac{dV}{dx} = A\gamma\,e^{\gamma x} - B\gamma\,e^{-\gamma x}$$

$$\text{But} \quad \frac{dV}{dx} = IZ$$

$$IZ = A\gamma\,e^{\gamma x} - B\gamma\,e^{-\gamma x}$$

$$= A\sqrt{ZY}\,e^{\sqrt{ZY}\,x} - B\sqrt{ZY}\,e^{-\sqrt{ZY}\,x} \qquad [\because \gamma = \sqrt{ZY}\,]$$

$$I = A\sqrt{\frac{Y}{Z}}\,e^{\sqrt{ZY}\,x} - B\sqrt{\frac{Y}{Z}}\,e^{-\sqrt{ZY}\,x} \qquad \ldots (1.7)$$

Similarly, differentiating the equation (1.6) w.r.t. 'x' $\quad I = C e^{\gamma x} + D e^{-\gamma x}$

$$\frac{dI}{dx} = C\gamma e^{\gamma x} - D\gamma e^{-\gamma x}$$

$$\text{But } \frac{dI}{dx} = VY$$

$$VY = C\gamma e^{\gamma x} - D\gamma e^{-\gamma x}$$

$$= C\sqrt{ZY}\, e^{\sqrt{ZY}\,x} - D\sqrt{ZY}\, e^{-\sqrt{ZY}\,x}$$

$$V = C\sqrt{\frac{Z}{Y}}\, e^{\sqrt{ZY}\,x} - D\sqrt{\frac{Z}{Y}}\, e^{-\sqrt{ZY}\,x} \qquad \ldots (1.8)$$

Once again Substitute the boundary condition to (1.7)and (1.8) $\quad x = 0, \quad \therefore \; I = I_R$

Substituting this condition in equations (1.5), (1.6), (1.7) and (1.8).

$$V_R = A + B \qquad \ldots (1.9)$$

$$I_R = C + D \qquad \ldots (1.10)$$

$$I_R = A\sqrt{\frac{Y}{Z}} - B\sqrt{\frac{Y}{Z}} \qquad \ldots (1.11)$$

$$V_R = C\sqrt{\frac{Z}{Y}} - D\sqrt{\frac{Z}{Y}} \qquad \ldots (1.12)$$

Step 3 : To find the value of arbitrary constants

To solve these equations,

$$\text{Let } Z_0 = \sqrt{\frac{Z}{Y}} \quad \text{and} \quad \frac{1}{Z_0} = \sqrt{\frac{Y}{Z}}$$

and $$V_R = I_R Z_R$$

Substituting the above condition in (1.9), (1.10), (1.11) and (1.12), we get

$$\boxed{A = \frac{V_R}{2}\left[1 + \frac{Z_o}{Z_R}\right]} \qquad \boxed{B = \frac{V_R}{2}\left[1 - \frac{Z_o}{Z_R}\right]} \qquad \boxed{C = \frac{I_R}{2}\left[1 + \frac{Z_R}{Z_o}\right]} \qquad \boxed{D = \frac{I_R}{2}\left[1 - \frac{Z_R}{Z_o}\right]}$$

Lets consider $E_R = V_R$

Step 4 : General Equation - Voltage and Current of Transmission Lines

Sub the value in differential equation of transmission lines

$$E = \frac{E_R}{2}\left[\left(1+\frac{Z_0}{Z_R}\right)e^{s\sqrt{ZY}} + \left(1-\frac{Z_0}{Z_R}\right)e^{-s\sqrt{ZY}}\right] \text{---} \quad (1.13)$$

$$I = \frac{I_R}{2}\left[\left(1+\frac{Z_R}{Z_0}\right)e^{s\sqrt{ZY}} + \left(1-\frac{Z_R}{Z_0}\right)e^{-s\sqrt{ZY}}\right] \text{---} \quad (1.14)$$

Rearranging (8.a) and (8.b)

$$E = \frac{E_R\,(Z_R+Z_0)}{2\,Z_R}\left[e^{s\sqrt{zy}} + \left(\frac{Z_R-Z_0}{Z_R+Z_0}\right)e^{-s\sqrt{zy}}\right] ----(1.15)$$

$$I = \frac{I_R\,(Z_R+Z_0)}{2\,Z_0}\left[e^{s\sqrt{zy}} - \left(\frac{Z_R-Z_0}{Z_R+Z_0}\right)e^{-s\sqrt{zy}}\right] ----(1.16)$$

Rearranging (1.15) and (1.16) in Trigonometric form

$$E = E_R\left(\cosh\sqrt{zy}\,s\right) + I_R Z_0\left(\sinh\sqrt{zy}\,s\right) ----(1.17)$$

$$I = I_R\left(\cosh\sqrt{zy}\,s\right) + \frac{E_R}{Z_0}\left(\sinh\sqrt{zy}\,s\right) ----(1.18)$$

Special Cases of Transmission Line

Having considered this general case, we may now consider two special cases

1. **Lossless transmission line**

2. **Distortionless line**

1. Lossless transmission line

A transmission line is said to be **lossless** if the conductors of the line are perfect **($\sigma_c \approx \infty$)** and the dielectric medium separating them is lossless **($\sigma \approx 0$)**

For lossless line, $\boxed{R=G=0}$

Since $\gamma = \alpha + j\beta = \sqrt{(R + j\omega L)(G + j\omega C)}$

$\rightarrow$

$$\alpha = 0, \quad \gamma = j\beta, \quad \beta = \omega\sqrt{LC}$$

$$u = \frac{\omega}{\beta} = \frac{1}{\sqrt{LC}} = f\lambda, \qquad \lambda = \frac{2\pi}{\beta}$$

$$X_o = 0 \qquad Z_o = R_o = \sqrt{\frac{L}{C}}$$

2. Distortionless line

A **distortionless line** is one in which the attenuation constant **α** is **frequency independent** while the phase constant **β** is **linearly dependent on frequency**.

A distorionless line results if the line parameters are such that

$$\boxed{\frac{R}{L} = \frac{G}{C}}$$

$$Thus, \quad \gamma = \sqrt{(R + j\omega L)(G + j\omega C)} = \sqrt{RG\left(1 + \frac{j\omega L}{R}\right)\left(1 + \frac{j\omega C}{G}\right)}$$

$$\gamma = \sqrt{RG}\left(1 + \frac{j\omega C}{G}\right) = \alpha + j\beta$$

$$or \quad \alpha = \sqrt{RG}, \quad \beta = \omega\sqrt{LC}$$

α does not depend on frequency, whereas **β** is a linear function of frequency.

$$u = \omega / \beta = 1 / \sqrt{LC} \text{ (frequency independent)}$$

Distortionless Line (R/L=G/C)

$$Z_0 = \sqrt{\frac{R + j\omega L}{G + j\omega C}} = \sqrt{\frac{R(1 + j\omega L / R)}{G(1 + j\omega C / G)}} = \sqrt{\frac{R}{G}} = \sqrt{\frac{L}{C}} \qquad \text{(Real)}$$

$$u = \frac{\omega}{\beta} = \frac{1}{\sqrt{LC}}$$

Notes:

- Shape distortion of signals happen if $\boldsymbol{\alpha}$ and $\boldsymbol{u}$ are frequency dependent.
- $\boldsymbol{u}$ and $\mathbf{Z_0}$ for distortionless line are the same as lossless line.
- A lossless line is also a distortionless line, but a distortionless line is not necessarily lossless.
- Lossless lines are desirable in power transmission, and telephone lines are required to be distortionless.

Transmission Line Parameter

Hence, the **wave equations** for voltage and current become

$$\frac{d^2V_s}{dz^2} - \gamma^2 V_s = 0, \quad \frac{d^2I_s}{dz^2} - \gamma^2 I_s = 0$$

$$E = E_R(\cosh\sqrt{zy}\,s) + I_R Z_0(\sinh\sqrt{zy}\,s) ----(10.a)$$

$$I = I_R(\cosh\sqrt{zy}\,s) + \frac{E_R}{Z_0}(\sinh\sqrt{zy}\,s) ----(10.b)$$

1. Propagation Constant

$$\gamma = \sqrt{zy} = \sqrt{(R + j\omega L)(G + j\omega C)}$$

γ : is the propagation constant

α : attenuation constant (Np/m or dB/m)

β : phase constant (rad/m)

2. Wavelength and Wave velocity

wavelength is: $\lambda = \frac{2\pi}{\beta}$, wave velocity is: $u = \frac{\omega}{\beta} = f\lambda$

$$v = \frac{\omega}{\beta}$$

$$[\because \beta = \frac{2\pi}{\lambda} \text{ and } \omega = 2\pi f]$$

$$\beta\lambda = 2\pi$$

$$\lambda = \frac{2\pi}{\beta} \quad \text{or} \quad \lambda = \frac{v}{f}$$

The distance travelled by the wave along the line while the phase angle is changing through 2π radians is called wavelength.

Transmission Line Parameter

3. Characteristic Impedance

The Characteristic Impedance Z_0 of the line is the ratio of the positively travelling voltage wave to the current wave at any point on the line.

$$E = \frac{E_R\,(Z_R + Z_0)}{2\,Z_R}\left[e^{s\sqrt{zy}} + \left(\frac{Z_R - Z_0}{Z_R + Z_0}\right) e^{-s\sqrt{zy}}\right] ----(9.a)$$

$$I = \frac{I_R\,(Z_R + Z_0)}{2\,Z_0}\left[e^{s\sqrt{zy}} - \left(\frac{Z_R - Z_0}{Z_R + Z_0}\right) e^{-s\sqrt{zy}}\right] ----(9.b)$$

$e^{\sqrt{zy}}$ $\rightarrow$ $+ive\ sign\ indicates\ incident\ wave\ )\ from\ source\ to\ receiver$

$e^{-\sqrt{zy}}$

$\rightarrow$ $-ive\ sign\ indicates\ refelcted\ wave\ from\ source\ to\ receiver$

$$Z_0 = \sqrt{\frac{Z}{Y}} = \sqrt{\frac{(R + j\omega L)}{(G + j\omega C)}}$$

Summary

	γ	Z_o
General	$\gamma = \sqrt{(R + j\omega L)(G + j\omega C)}$	$Z_o = \sqrt{\dfrac{R + j\omega L}{G + j\omega C}}$
Lossless	$\gamma = 0 + j\omega\sqrt{LC}$	$Z_o = R_o = \sqrt{\dfrac{L}{C}}$
Distortionless	$\gamma = \sqrt{RG} + j\omega\sqrt{LC}$	$Z_o = R_o = \sqrt{\dfrac{L}{C}}$

Reflection Coefficient

Reflection coefficient is defined as the ratio of the reflected voltage to the incident voltage at the receiving end of the line.

$$K = \frac{\text{Reflected voltage at load}}{\text{Incident voltage at load}} = \frac{V_R}{V_S}$$

The equation for the voltage of a transmission line is

$$V = \frac{V_R (Z_R + Z_o)}{2 Z_R} \left[e^{\gamma x} + \left(\frac{Z_R - Z_o}{Z_R + Z_o} \right) e^{-\gamma x} \right]$$

$$V = \frac{V_R (Z_R + Z_o)}{2 Z_R} e^{\gamma x} + \frac{V_R (Z_R - Z_o)}{2 Z_R} e^{-\gamma x}$$

The first term ($e^{\gamma x}$) represents incident wave, whereas the second term ($e^{-\gamma x}$) represents the reflected wave. The ratio of amplitude of the reflected wave voltage to the amplitude of the incident wave voltage is nothing but reflection coefficient.

$$K = \frac{\dfrac{V_R (Z_R - Z_o)}{2 Z_R}}{\dfrac{V_R (Z_R + Z_o)}{2 Z_R}} = \frac{Z_R - Z_o}{Z_R + Z_o}$$

$$\boxed{K = \frac{Z_R - Z_o}{Z_R + Z_o}}$$

Reflection Coefficient (at Load)

Define Γ_L as the voltage reflection coefficient (at the load), as the ratio of the voltage reflection wave to the incident wave at the load,

$$\Gamma_L = \frac{V_0^- e^{\gamma l}}{V_0^+ e^{-\gamma l}}$$

$$\boxed{\Gamma_L = \frac{Z_L - Z_0}{Z_L + Z_0}}$$ (Voltage Reflection coefficient at load)

Reflection Coefficient

The **voltage reflection coefficient** at any point on the line is the ratio of the reflected voltage wave to that of the incident wave.

That is: $\Gamma(z) = \dfrac{V_0^- e^{\gamma z}}{V_0^+ e^{-\gamma z}} = \dfrac{V_0^-}{V_0^+} e^{2\gamma z}$

The **current reflection coefficient** at any point on the line is the negative of the voltage reflection coefficient at that point.

Thus the current reflection coefficient at the load is

$$I_0^- e^{\gamma l} / I_0^+ e^{-\gamma l} = -\Gamma_L$$

Standing wave (Transverse wave)

Two sine waves with the same Amplitude, Wavelength and Frequency **travelling in opposite directions will interfere and produce a combined wave** (Figure 1). The waveform of the combined waves, on average has No Net Propagation of Energy and is known **as standing wave.**

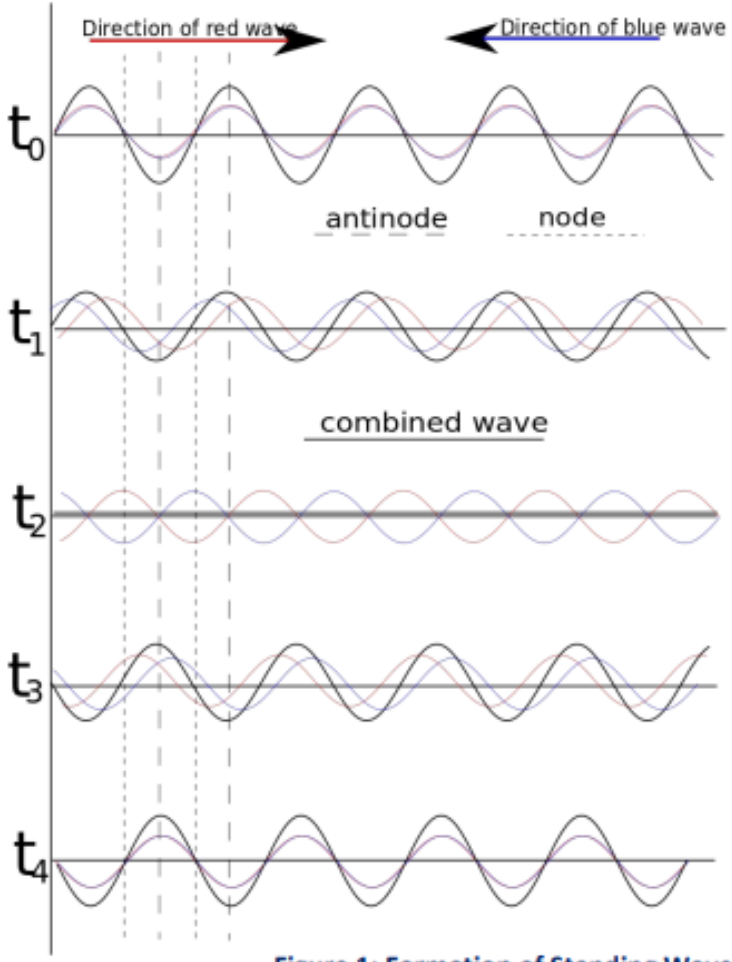

Figure 1: Formation of Standing Wave

Property of standing wave:

(1) Nodes: Points which are stationary and with zero amplitude. At nodes, two waves travel in exactly same amplitude and out of phrase offset with each other. (Figure 2).

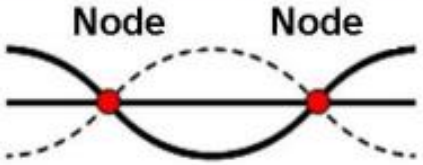

Figure 2: Nodes of Standing Wave

(2) Antinodes: Points at maximum amplitude. At antinodes, two waves travel in exactly same amplitude and in phrase reinforce with each other. (Figure 3).

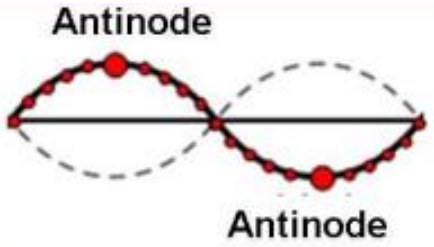

Figure 3: Antinodes of Standing Wave

(3) The maximum amplitude of each particle is related with its position and each amplitude oscillates periodically.. (Figure 4).

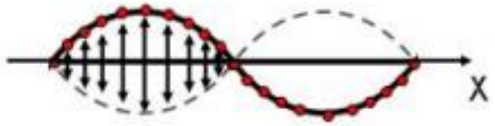

Figure 4: Amplitude at different particles of the Standing Wave

Property of standing wave:

(4) The distance between two adjacent nodes or two adjacent antinodes is equal to half of the wavelength (Figure 5).

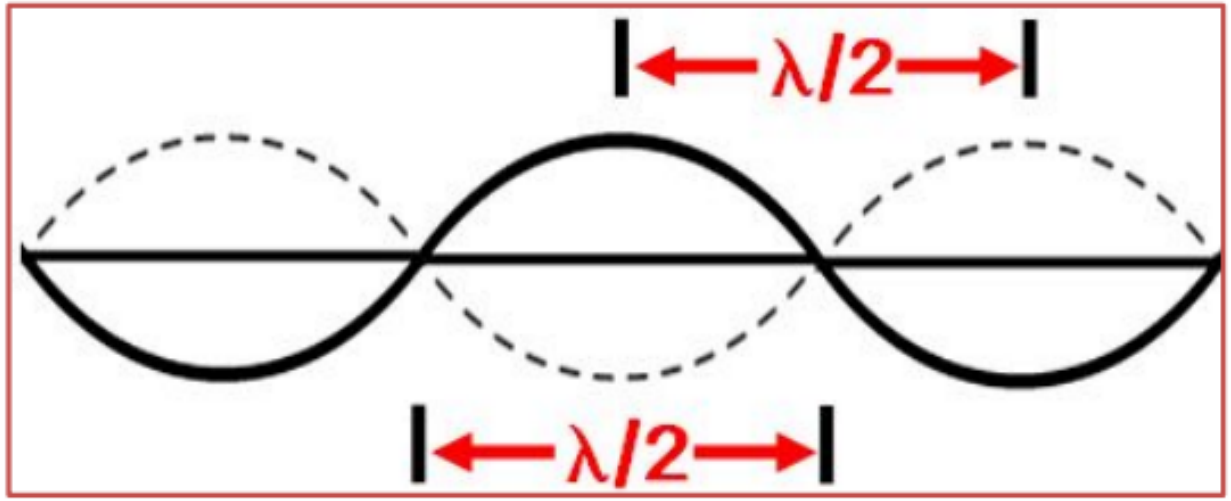

Figure 5: Distance between nodes or antinodes

(5) As the displacement of the nodes is always zero, the waveform is not travelling. Hence energy is confined between two adjacent nodes.

V_{max} and V_{min}

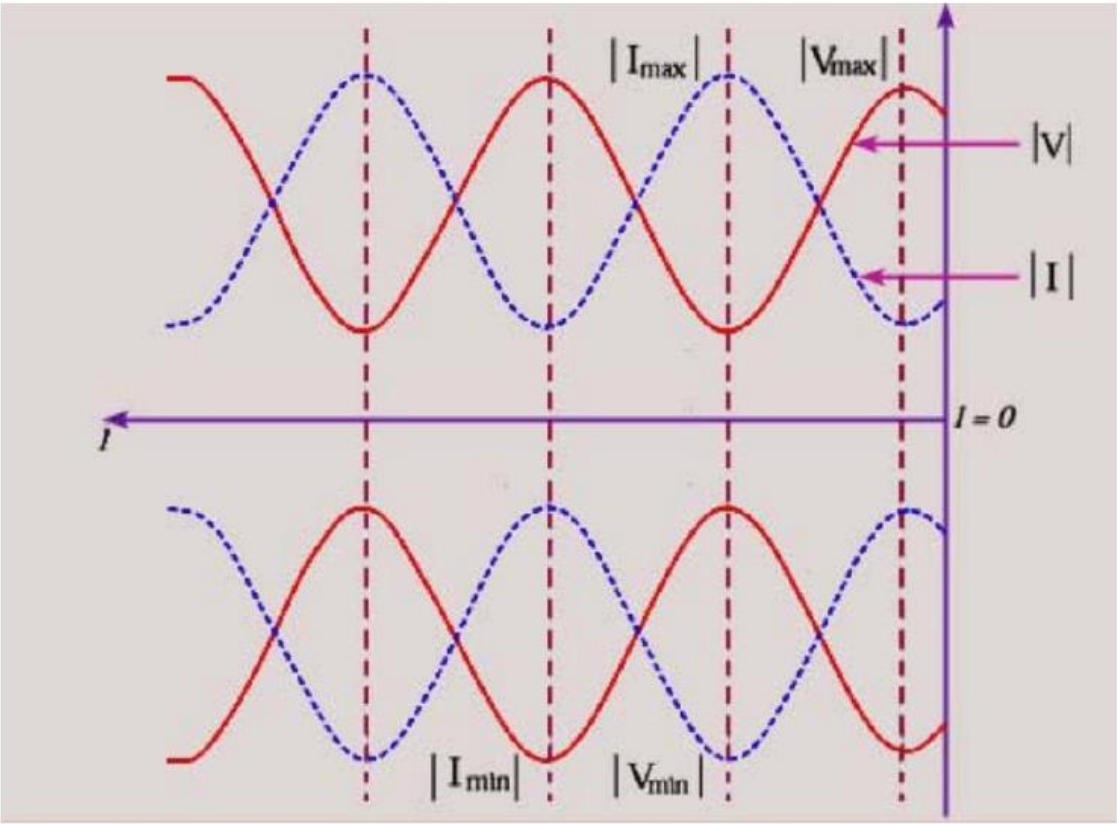

- The maximum and minimum peak voltages measured on the line are

$$|V|_{max} = |V^+|\left(1+|\Gamma_L|\right)$$

$$|V|_{min} = |V^+|\left(1-|\Gamma_L|\right)$$

- V_{max} - when both $E_{reflected}$ and $E_{incident}$ are in phase with each other
- V_{min} - when both $E_{reflected}$ and $E_{incident}$ are out of phase with each other

Standing Wave Ratio

Whenever there is a reflected wave, a **standing wave** will form out of the combination of incident and reflected waves.

The standing wave ratio s is defined as: (as we did for plane waves)

$$s = \frac{V_{\max}}{V_{\min}} = \frac{I_{\max}}{I_{\min}} = \frac{1+|\Gamma_L|}{1-|\Gamma_L|}$$

$$\Gamma_L = \frac{Z_L - Z_0}{Z_L + Z_0}$$

When load is *perfectly matched* $(Z_L = Z_0) \rightarrow$ Total Transmission

$$|\Gamma_L| = 0 \rightarrow s = 1$$

When load is a *short circuit* :

$\rightarrow$ Total Reflection

$$\Gamma_L = -1 \rightarrow |\Gamma_L| = 1 \Rightarrow s = \infty$$

When load is an *open circuit* :

$\rightarrow$ Total Reflection

$$\Gamma_L = +1 \rightarrow |\Gamma_L| = 1 \Rightarrow s = \infty$$

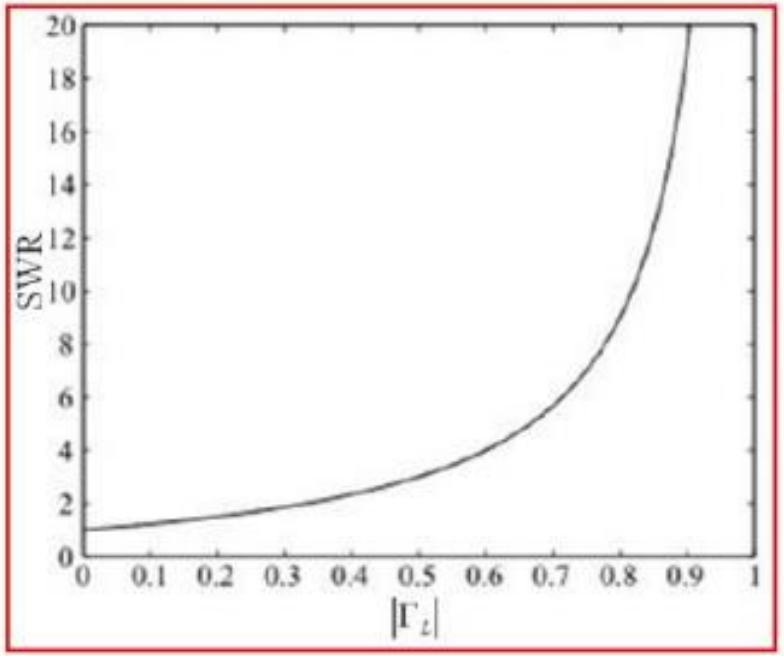

Special Cases , $Z_L=0$, $Z_L=\infty$, $Z_L=Z_0$

Short Circuited Line

($Z_L=0$)

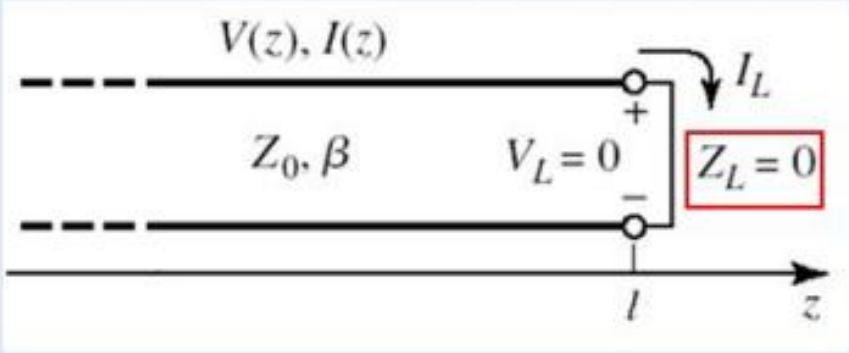

Open Circuited Line

($Z_L=\infty$)

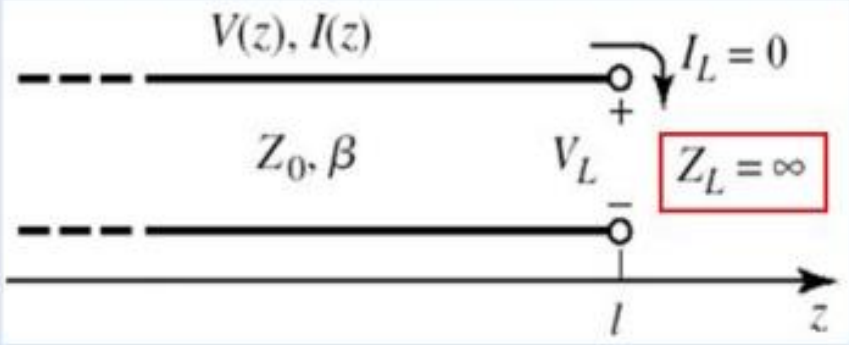

Matched Line

($Z_L=Z_0$)

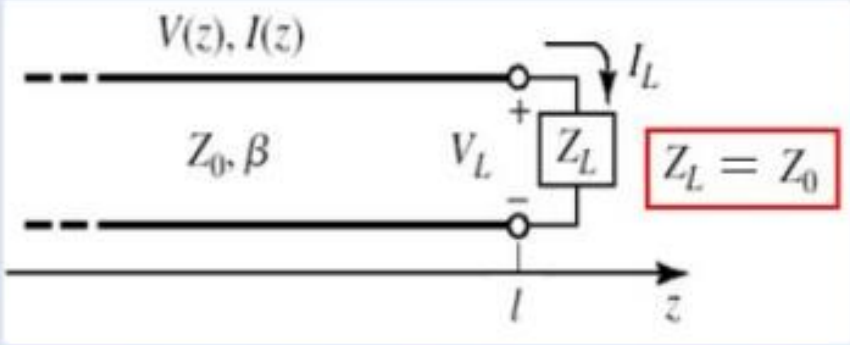

Input Impedance

1. Input Impedance of General Case – Lossy Line

$$\frac{e^{\gamma l}+e^{-\gamma l}}{2}=\cosh\gamma l,\quad \frac{e^{\gamma l}-e^{-\gamma l}}{2}=\sinh\gamma l\ ,$$

$$\text{or}\quad \tanh\gamma l=\frac{\sinh\gamma l}{\cosh\gamma l}=\frac{e^{\gamma l}-e^{-\gamma l}}{e^{\gamma l}+e^{-\gamma l}}$$

we get

$$\boxed{Z_{in}=Z_0\left[\frac{Z_L+Z_0\tanh\gamma l}{Z_0+Z_L\tanh\gamma l}\right]}$$

(General - Lossy Line)

2. Input Impedance of General Case – Lossless Line

$$Z_{in} = Z_0 \left[\frac{Z_L + Z_0 \tanh \gamma l}{Z_0 + Z_L \tanh \gamma l} \right] \quad \text{(General - Lossy Line)}$$

For a lossless line, $\gamma = j\beta$, $\tanh j\beta l = j \tan \beta l$, then

$$\alpha + j\beta$$

$$\boxed{Z_{in} = Z_0 \left[\frac{Z_L + jZ_0 \tan \beta l}{Z_0 + jZ_L \tan \beta l} \right]} \quad \text{(Lossless Line)}$$

βl is known as ***electrical length***, in degrees or radians

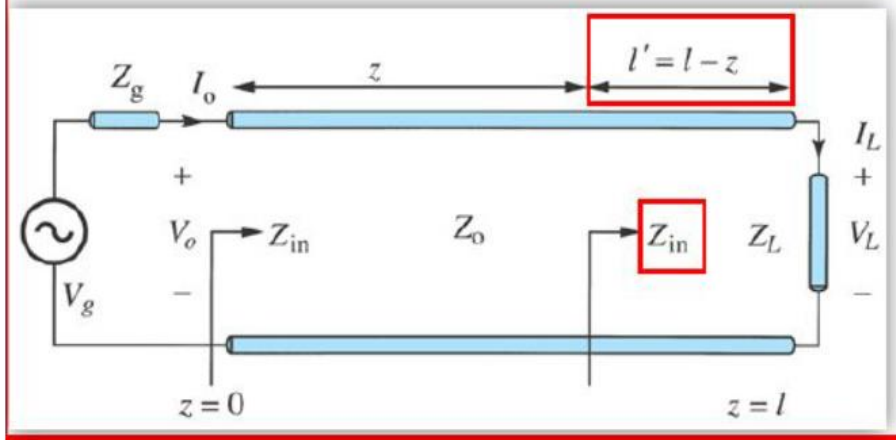

Note: To find Z_{in} at a distance l' from load, replace l by l' :-

$$Z_{in} = Z_0 \left[\frac{Z_L + jZ_0 \tan \beta l'}{Z_0 + jZ_L \tan \beta l'} \right]$$

Shorted Line (Z_L=0)

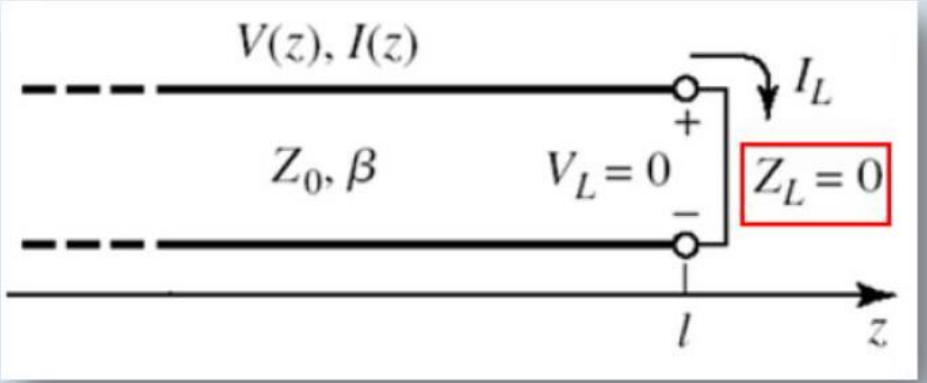

$$Z_{in} = Z_0 \frac{Z_L + jZ_0 \tan \beta l}{Z_0 + jZ_L \tan \beta l} = jZ_0 \tan \beta l$$

$$\Gamma_L = \frac{Z_L - Z_0}{Z_L + Z_0} = -1, \quad s = \infty \qquad \text{(Total Reflection)}$$

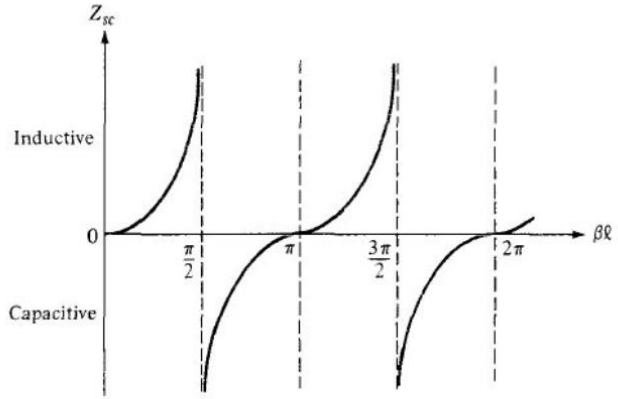

ELI

$$Z_{sc} = jZ_o \tan \beta \ell$$

1. For **first quarter wave-length**, a short-circuited line act as **an inductance**
2. **For second quarter wave-length**, a short-circuited line act as **an capacitance**

Open-Circuited Line ($Z_L=\infty$)

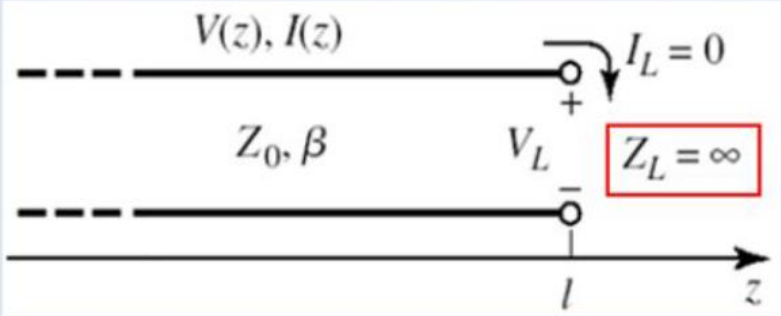

$$Z_{in} = Z_0 \frac{Z_L + jZ_0 \tan \beta l}{Z_0 + jZ_L \tan \beta l}, \qquad (Z_L = \infty)$$

$$Z_{in} = Z_0 \frac{\left(1 + j\dfrac{Z_0}{Z_L}\tan \beta l\right)}{\left(\dfrac{Z_0}{Z_L} + j\tan \beta l\right)} = \frac{Z_0}{j\tan \beta l} = -jZ_0 \cot \beta l$$

$$\Gamma_L = \frac{Z_L - Z_0}{Z_L + Z_0} = 1, \quad s = \infty \qquad \text{(Total Reflection)}$$

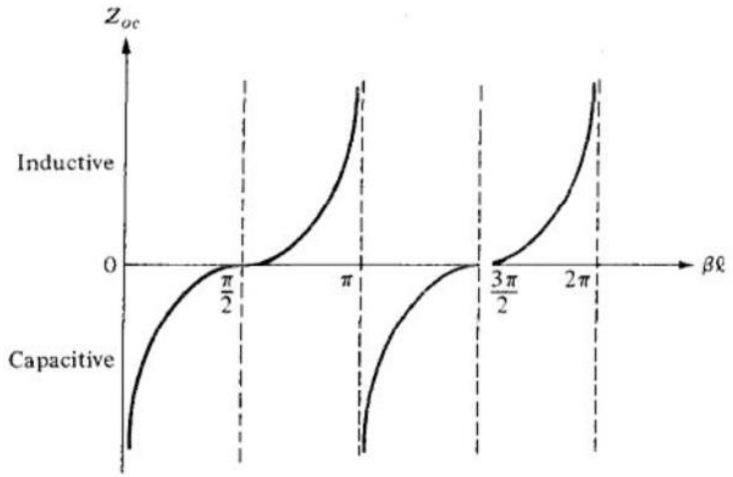

$$Z_{oc} = -jZ_o \cot \beta \ell$$

ICE

1. For **first quarter wave-length**, a open -circuited line act as **an capacitance**
2. **For second quarter wave-length**, a open-circuited line act as **an inductance**

Matched Line ($Z_L = Z_0$)

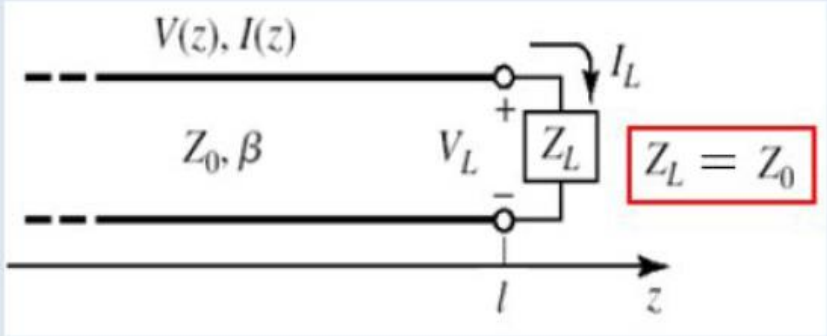

Most desired case from practical point of view.

$$Since \;\; Z_{in} = Z_0 \;\rightarrow\; Z_{in} = Z_0$$

$$\Gamma_L = \frac{Z_L - Z_0}{Z_L + Z_0} = 0, \quad s = 1$$

The whole wave is transmitted, and there is no reflection.

The incident power is fully absorbed by the load.

$\Rightarrow$ (Maximum power transfer)

Problem - 1

The magnitudes of the open – circuit and short – circuit input impedances of a transmission line are 100 Ω and 25 Ω respectively. The characteristic impedance of the line is.

Soln. $$Z_0 = \sqrt{Z_{0C} \cdot Z_{SC}} = \sqrt{100 \times 25}$$

$$Z_0 = 10 \times 5$$

$$= 50\Omega$$

Problem - 2

The VSWR can have any value between

Soln. $$VSWR = \frac{1+|\rho|}{1-|\rho|}$$

Where ρ is reflection coefficient ρ can take values between 0 and 1

when $\rho = 0,\ VSWR = 1$

$\rho = 1,\ VSWR = \infty$

Example 11.1

An air line has characteristic impedance of 70 Ω and a phase constant of 3 rad/m at 100 MHz. Calculate the inductance per meter and the capacitance per meter of the line.

An air line can be regarded as lossless line because $\sigma \simeq 0$

and $\sigma_c \to \infty$. *Hence* $R = G = 0$ and $\alpha = 0$

$$Z_0 = R_0 = \sqrt{\frac{L}{C}}$$

$$\beta = \omega\sqrt{LC}$$

Deviding the two equations yields: $\dfrac{R_0}{\beta} = \dfrac{1}{\omega C}$

$$or \quad C = \frac{\beta}{\omega R_0} = \frac{3}{2\pi \times 100 \times 10^6 (70)} = 68.2 \text{ pF}$$

$$L = R_0^2 C = (70)^2 (68.2 \times 10^{-12}) = 334.2 \text{ nH/m}$$

Example 11.2

A distortionless line has Z_0=60 Ω, α=20 mNp/m, u=0.6c, where c is the speed of light. Find R,L,G , C and λ at 100 MHz.

A distortionless line has $RC = GL$ or $G = \frac{RC}{L}$, $u = \frac{\omega}{\beta} = \frac{1}{\sqrt{LC}}$

$$Z_0 = \sqrt{\frac{L}{C}} \quad , \quad \alpha = \sqrt{RG} = R\sqrt{\frac{C}{L}} = \frac{R}{Z_0}$$

$$\rightarrow R = \alpha Z_0 = (20\times10^{-3})(60) = 1.2\ \Omega/\text{m}$$

$$Since \quad \alpha = \sqrt{RG} \rightarrow G = \frac{\alpha^2}{R} = \frac{400\times10^{-6}}{1.2} = 333\ \mu\text{S/m}$$

$$Dividing \quad Z_0 = \sqrt{\frac{L}{C}} \text{ by } u = \frac{\omega}{\beta} = \frac{1}{\sqrt{LC}} \text{ gives}$$

$$L = \frac{Z_0}{u} = \frac{60}{0.6(3\times10^8)} = 333\ \text{nH/m}$$

Example 11.2 – solution continued

$$Multiplying\ \ Z_0 = \sqrt{\frac{L}{C}}\ \text{ by }\ u = \frac{\omega}{\beta} = \frac{1}{\sqrt{LC}}\ \text{ gives}$$

$$uZ_0 = \frac{1}{C} \rightarrow C = \frac{1}{uZ_0} = \frac{1}{0.6(3\times10^8)60} = 92.59\ \text{pF/m}$$

$$\lambda = \frac{u}{f} = \frac{0.6(3\times10^8)}{10^8} = 1.8\ \text{m}$$

α is the attenuation coefficient (nepers/meter)

What is the attenuation in dB per meter?

$$Att_{dB/m} = 20\log\left(e^{\alpha}\right) = 20\alpha\log\left(e\right) = 8.686\alpha$$

(One neper is 8.686 dB)

Example 11.3

A certain transmission line 2 m long operating at $\omega=10^6$ rad/s has $\alpha=8$ dB/m, $\beta=1$ rad/m, and $Z_0= 60+j40\ \Omega$. If the line is connected to a source of $10\angle 0^0$ V, $Z_g=40\ \Omega$ and transmitted by a load of $20+j50\ \Omega$, determine

(a) The input impedance

(b) The sending end current

(c) The current at the middle of the line.

Solution

(*a*) Since 1 Np=8.686 dB

$$\alpha=\frac{8}{8.686}=0.921\ Np/m$$

$$\gamma=\alpha+j\beta=0.921+j1$$

$$\gamma l=2(0.921+j1)=1.84+j2$$

Example 11.3 – Solution continued

$$\tanh \gamma l = \tanh(1.84 + j2) = 1.033 - j0.03929$$

$$Z_{in} = Z_0 \left[\frac{Z_L + Z_0 \tanh \gamma l}{Z_0 + Z_L \tanh \gamma l} \right]$$

$$Z_{in} = (60 + j40) \left[\frac{20 + j50 + (60 + j40)(1.033 - j0.03929)}{60 + j40 + (20 + j50)(1.033 - j0.03929)} \right]$$

$$Z_{in} = 60.25 + j38.79\ \Omega$$

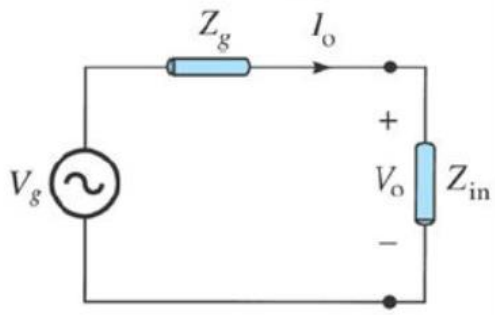

(*b*) The sending end current is $I(z = 0) = I_0$

$$I_0 = \frac{V_g}{Z_{in} + Z_g} = \frac{10}{60.25 + j38.79 + 40} = 93.03\angle -21.15\ mA$$

Example 11.3 – Solution continued

(*c*) To find the current at any point, we need V_0^+ and V_0^-. *But*

$$I_0 = 93.03\angle -21.15\ mA$$

$$V_0 = Z_{in} I_0 = (71.66\angle 32.77^0)(0.09303\angle -21.15^0) = 6.667\angle 11.62^0$$

$$V_0^+ = \frac{1}{2}(V_0 + Z_0 I_0) = \frac{1}{2}\left[6.667\angle 11.62 + (60 + j40)(0.09303\angle -21.15)\right]$$

$$= 6.687\angle 12.08^0$$

$$V_0^- = \frac{1}{2}(V_0 - Z_0 I_0) = \frac{1}{2}\left[6.667\angle 11.62 - (60 + j40)(0.09303\angle -21.15)\right]$$

$$= 0.0518\angle 260^0$$

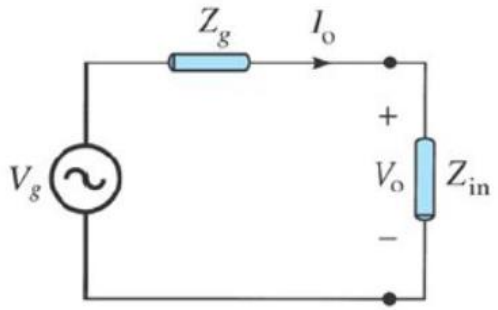

A telephone line has $R = 30\ \Omega/\text{km}$, $L = 100\ \text{mH/km}$, $G = 0$, and $C = 20\ \mu\text{F/km}$. At $f = 1\ \text{kHz}$, obtain:

(a) The characteristic impedance of the line

(b) The propagation constant

(c) The phase velocity

(a) $70.75\angle{-1.367^\circ}\ \Omega$, (b) $2.121 \times 10^{-4} + j8.888 \times 10^{-3}/\text{m}$, (c) 7.069×10^{5} m/s.

A transmission line operating at 500 MHz has $Z_0 = 80\ \Omega$, $\alpha = 0.04\ \text{Np/m}$, $\beta = 1.5\ \text{rad/m}$. Find the line parameters R, L, G, and C.

$3.2\ \Omega/\text{m}$, $38.2\ \text{nH/m}$, $5 \times 10^{-4}\ \text{S/m}$, $5.97\ \text{pF/m}$.

Determine the values of VSWR in the case of (a)Zr=0 (b) Zr=Zo

(a) Zr=0, |K|=1, SWR= ∞

(b)Zr=Zo, K=0, SWR=1

Determine the Reflection coefficient values various load termination.

Impedance of transmission line termination (Z_L)	Reflection Coefficient, K
$Z_L = 0$ (short circuit)	-1
$0 < \lvert Z_L \rvert < Z_0$	$-1 \leq K \leq 0$
$Z_L = Z_0$	0
$Z_0 < \lvert Z_L \rvert < \infty$	$0 \leq K \leq 1$
$Z_L = \infty$ (open circuit)	+1

A lossless line has a characteristics impedance of 400 ohms. Determine the standing wave ratio if the receiving end impedance is 800+ j 0.0 ohms.

ANS:

Z_0=400ohm, Z_R=800+j0.0ohms.

$$(K) = \frac{Z_R - Z_0}{Z_R + Z_0} = \frac{800 - 400}{800 + 400} = \frac{1}{3}$$

$$\boldsymbol{SWR = \frac{1 + |K|}{1 - |K|} = \frac{1 + \frac{1}{3}}{1 - \frac{1}{3}} = 2}$$

23. A transmission line whose characteristic impedance is 300 ohms is terminated in a load resistance of 100 ohms. What is the SWR? **[Apply]**

$$SWR = \frac{1 + |K|}{1 - |K|}$$

$$SWR = \frac{1+\left|\frac{Z_L - Z_0}{Z_L + Z_0}\right|}{1-\left|\frac{Z_L - Z_0}{Z_L + Z_0}\right|} = \frac{1+\left|\frac{100-300}{100+300}\right|}{1-\left|\frac{100-300}{100+300}\right|} = \frac{1+\left|\frac{-200}{400}\right|}{1-\left|\frac{-200}{400}\right|} = \frac{1+|-0.5|}{1-|-0.5|} = \frac{1+0.5}{1-0.5} = \frac{1.5}{0.5} = 3.0$$

7.If VSWR of line is 1.5 then calculate its reflection coefficient. Nov -10,Dec 2012 **[Apply]**

VSWR = [1+|K|]/[1-|K|] = 1.5

1+|K| = 1.5-1.5|K|

2.5|K| = 1.5-1 = 0.5

|K| = 0.2

8.What are the values of SWR for open circuit, short circuit & matched load? **[Remember]**

When a load is either open circuit or short circuit, the value of |K| = 1.

Hence the value of SWR is given by,

SWR = [1+|K|]/[1-|K|] = [1+1]/[1-1] = ∞

When load is matched with characteristic impedance, the value of |K| is

Hence the value of SWR is given by,

SWR = [1+|K|]/[1-|K|] = [1+0]/[1-0] = 1